Migration Archiving (migarch)

Moving archive FROM disk.

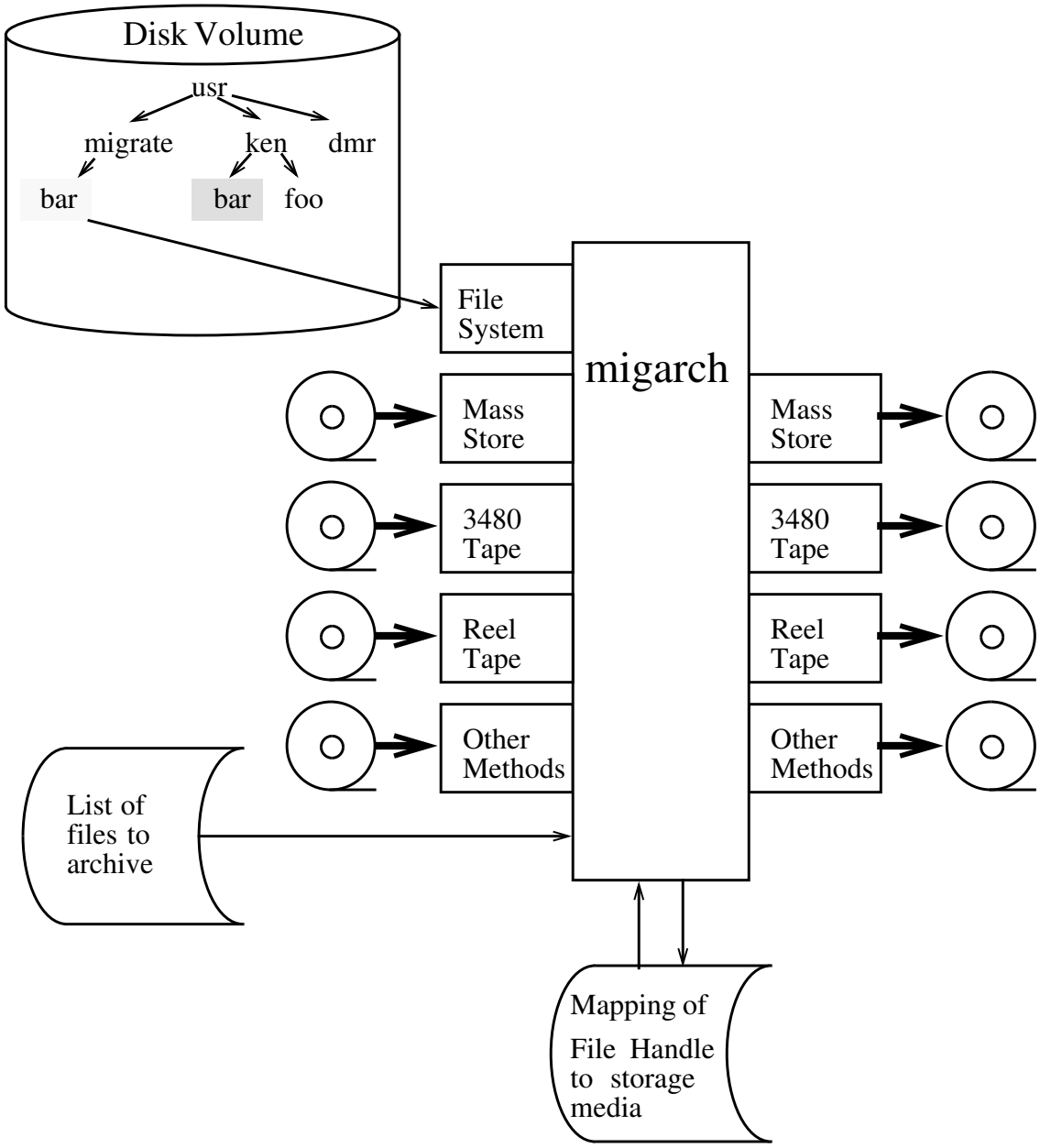

- Methods may include data compression.
- Must support media management and reclaiming partially used volumes. Update file handle DB with file's location info.